USB Type-C ENGINEERING CHANGE NOTICE

Title: Plug Dimensions Update
Applied to: USB Type-C Locking Connector Specification Release 1.0, March 9, 2016

Brief description of the functional changes proposed:
Plug overmold width and height for USB Type C cable assemblies are increased to provide extra space for using dielectric materials that comply with EU PFAS restrictions. This corresponds to similar updates that were made in the USB Type-C Specification.

Benefits as a result of the proposed changes:
Maintains USB cable lengths when dielectric materials are switched to fluoropolymer alternatives to comply with EU PFAS restriction.

An assessment of the impact to the existing revision and systems that currently conform to the USB specification:
The requirements are relaxed. Current cables that conform to the USB Spec. will meet the new requirement. Cables designed to the limit of new requirements may have physical incompatibility with existing systems designed at the limit of current requirements.

An analysis of the hardware implications:
This change will allow current cable lengths to be maintained for USB4 cables. Systems and accessories with recesses at current overmold sizes or closely spaced receptacles would need to be redesigned to accommodate new cables with a larger overmold.

An analysis of the software implications:
None.

An analysis of the compliance testing implications:
Test specs will be updated to align with the revised dimensions.

Actual Change Requested

(a). Figure 3-1, Page 9

From:

Figure 3-1 Single Screw USB Type-C Locking Plug

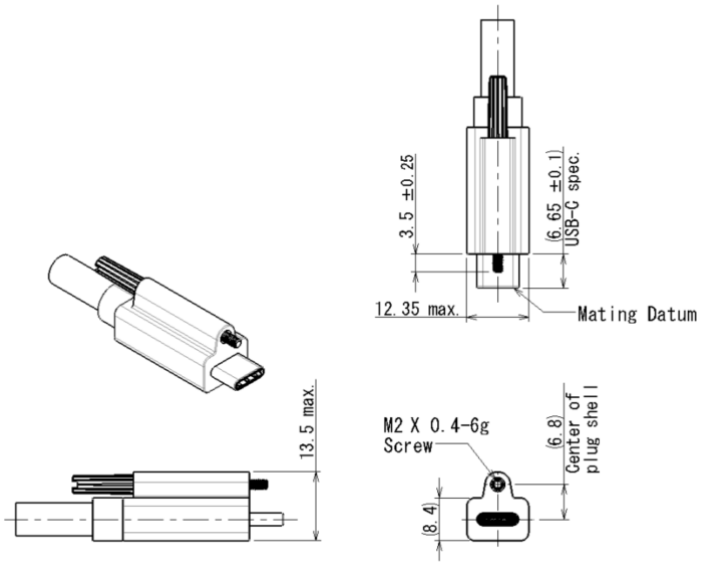

To:

Figure 3-1 Single Screw USB Type-C Locking Plug

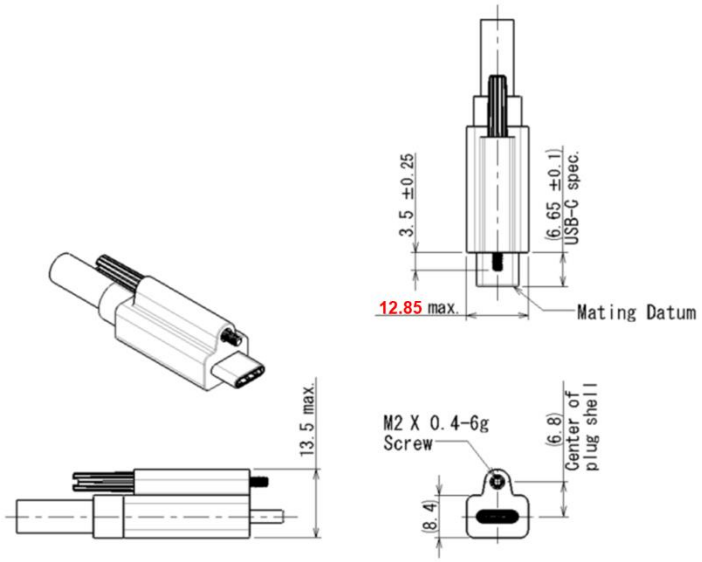

(b). Figure 3-3, Page 10

From:

Figure 3-3 Dual Screw USB Type-C Locking Plug

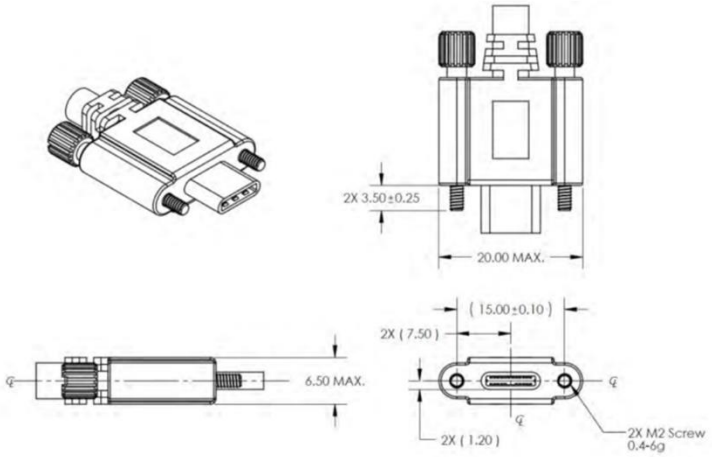

To:
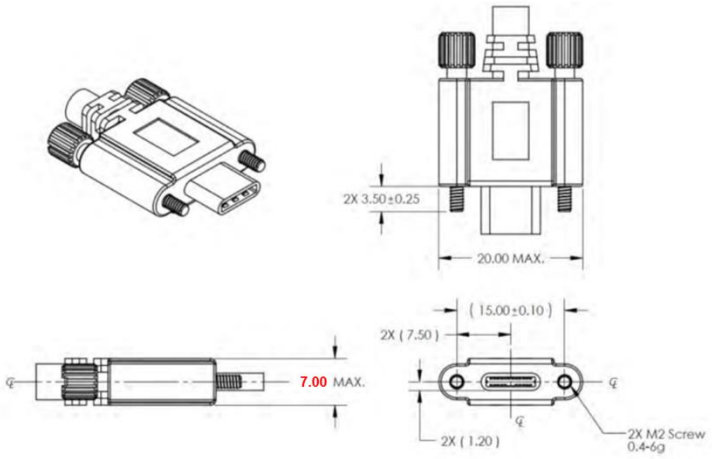
Figure 3-3 Dual Screw USB Type-C Locking Plug